STOANE
LIGHTING

ZTA.35.Mains Track.Framer

STD-000597-0034

Configured Product

Light Source

SL90

Light Source Size

6mm LES

CCT

3000K

Finish

RAL 9003 Signal White

Track adaptor colour

White

Dimming

Local Dim

Gobo Holder

No

Softening Diffuser/Accessory

No

Framer Type

Adjustable Beam

STOANE LIGHTING

ZTA.35.Mains Track.Framer

STD-000597-0034



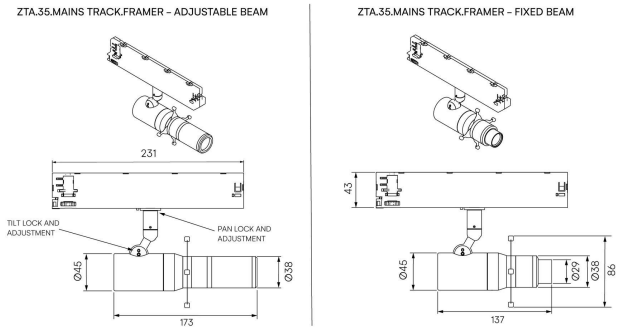

Modular high-performance, mains track-Mounted spotlight system, for interior architectural applications such as Museums, Galleries, Retail and Workplace environments. Engineered for exceptional durability, maintainability, re-manufacturability, and recyclability, this spotlight sets a new standard for sustainable design.

Easily interchangeable between fixed, Zoom optics and Framer attachments.

Product Description

Compatible with 3-circuit adapters for 120-277V Stucchi, Eutrac, Global Pulse, and other track systems, this spotlight includes integral dimming control gear.

Fixed uses a Wide Flood spread for long throws. Adjustable uses a Zoom lens to allow the user to narrow in on very fine details. Both are capable of holding a gobo.

Key Features

- Sustainable construction: made from recycled aluminium with a long-lasting anodised and powder-coated finish.
- Framing attachment can be easily swapped to fixed optics, Zoom and Wall Wash.
- The easy-to-adjust fins allow for precision positioning to sharply define light on pieces of artwork.
- Versatile adjustment: 363° pan rotation and 130° tilt with a lockable spot.
- Broad compatibility: 3-circuit adapter supports multiple track systems (Stucchi, Eutrac, Global Pulse).
- High-performance lighting: up to 98 CRI LEDs with interchangeable optical systems.
- Advanced dimming options: DALI, 0-10V, DMX and Wireless dimming, down to 0.1%.

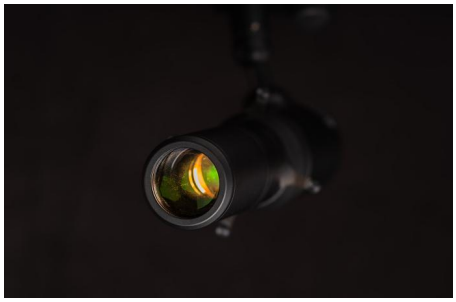

STOANE LIGHTING

ZTA.35.Mains Track.Framer

STD-000597-0034

Compliance

UK CA CE

Technical

Supply	230V/240V via 3 circuit track	
Light source	4mm LES COB	6mm LES COB
Initial output	**SL98** 4.3W 17.2Vf at 250mA	**SL98** 8.6W 34.4Vf at 250mA
	2400K · 355lm · 83lm/W 2700K · 418lm · 97lm/W 3000K · 446lm · 104lm/W 3500K · 446lm · 104lm/W 4000K · 471lm · 110lm/W	2400K · 733lm · 85lm/W 2700K · 863lm · 100lm/W 3000K · 923lm · 107lm/W 3500K · 923lm · 107lm/W 4000K · 974lm · 113lm/W
Light distribution	Adjustable 15.7° - 32.5° Fixed 50.2°	Adjustable 15.6° - 31.7° Fixed 50°
Lumen maintenance	L90 B0 in excess of 94,000 hours	
Colour consistency	2 SDCM	
IP rating	IP20	
Weight	0.65kg	

STOANE
LIGHTING

ZTA.35.Mains Track.Framer

STD-000597-0034

Service Commitment



