STOANE
LIGHTING

# ZTA.35.Surface.Framer

STD-000595-0084

## Configured Product

Light Source

SL98

Light Source Size

6mm LES

CCT

3000K

Finish

Matt Black

Dimming

Driver specific

Cable route

Through Base

Cable Length

500mm

Gobo Holder

Yes (sold separately)

Softening Diffuser/Accessory

Yes

Framer Type

Adjustable Beam

STOANE LIGHTING

# ZTA.35.Surface.Framer

STD-000595-0084



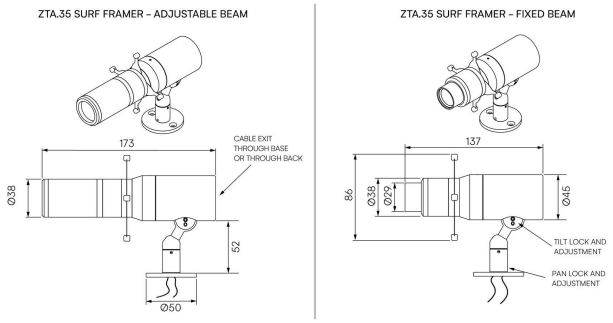


Modular high-performance, surface mounted spotlight system, for interior architectural applications such as Museums, Galleries, Retail and Workplace environments. Engineered for exceptional durability, maintainability, re-manufacturability, and recyclability, this spotlight sets a new standard for sustainable design.

Easily interchangeable between fixed, Zoom optics and framer attachments.

**Product Description**

ZTA.35.Surface.Framer is constructed from extruded and precision-machined recycled aluminium, the spotlight features an anodised and powder-coated finish for enhanced durability and aesthetics.

Fixed uses a Wide Flood spread for long throws. Adjustable uses a Zoom lens to allow the user to narrow in on very fine details. Both are capable of holding a gobo.

**Key Features**

- Sustainable construction: made from recycled aluminium with a long-lasting anodised and powder-coated finish.
- Framing attachment can be easily swapped to fixed optics, Zoom and Wall Wash.
- The easy-to-adjust fins allow for precision positioning to sharply define light on pieces of artwork.
- Versatile adjustment: 363° pan rotation and 130° tilt with a lockable spot.
- High-performance lighting: up to 98 CRI LEDs with interchangeable optical systems.
- Advanced dimming options: DALI, 0-10V, DMX and Wireless dimming, down to 0.1%.

## Compliance

UK CA CE

STOANE LIGHTING

# ZTA.35.Surface.Framer

STD-000595-0084

## Technical

| | | |
|---|---|---|
| **Supply** | Remote constant current LED driver required | |
| **Light source** | 4mm LES COB | 6mm LES COB |
| **Initial output** | **SL98** 4.3W 17.2Vf at 250mA<br>2400K · 355lm · 83lm/W<br>2700K · 418lm · 97lm/W<br>3000K · 446lm · 104lm/W<br>3500K · 446lm · 104lm/W<br>4000K · 471lm · 110lm/W | **SL98** 8.6W 34.4Vf at 250mA<br>2400K · 733lm · 85lm/W<br>2700K · 863lm · 100lm/W<br>3000K · 923lm · 107lm/W<br>3500K · 923lm · 107lm/W<br>4000K · 974lm · 113lm/W |
| **Light distribution** | Adjustable 15.7° - 32.5°<br>Fixed 50.2° | Adjustable 15.6° - 31.7°<br>Fixed 50° |
| **Lumen maintenance** | L90 B0 in excess of 94,000 hours | |
| **Colour consistency** | 2 SDCM | |
| **IP rating** | IP20 | |
| **Weight** | 0.51kg | |

## Service Commitment

ReNew

5 Year Warranty
25 Year Duty of Care