STOANE
LIGHTING

ZTA.35.Surface.Framer

STD-000595-0083

Configured Product

Light Source

SL98

Light Source Size

6mm LES

CCT

3000K

Finish

Matt Black

Dimming

Driver specific

Cable route

Through Base

Cable Length

500mm

Gobo Holder

No

Softening Diffuser/Accessory

No

Framer Type

Adjustable Beam

STOANE LIGHTING

ZTA.35.Surface.Framer

STD-000595-0083



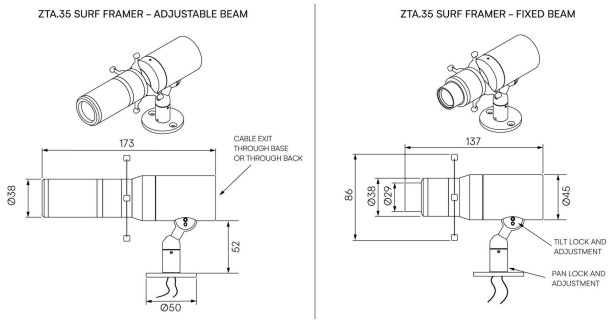

Modular high-performance, surface mounted spotlight system, for interior architectural applications such as Museums, Galleries, Retail and Workplace environments. Engineered for exceptional durability, maintainability, re-manufacturability, and recyclability, this spotlight sets a new standard for sustainable design.

Easily interchangeable between fixed, Zoom optics and framer attachments.

Product Description

ZTA.35.Surface.Framer is constructed from extruded and precision-machined recycled aluminium, the spotlight features an anodised and powder-coated finish for enhanced durability and aesthetics.

Fixed uses a Wide Flood spread for long throws. Adjustable uses a Zoom lens to allow the user to narrow in on very fine details. Both are capable of holding a gobo.

Key Features

- Sustainable construction: made from recycled aluminium with a long-lasting anodised and powder-coated finish.
- Framing attachment can be easily swapped to fixed optics, Zoom and Wall Wash.
- The easy-to-adjust fins allow for precision positioning to sharply define light on pieces of artwork.
- Versatile adjustment: 363° pan rotation and 130° tilt with a lockable spot.
- High-performance lighting: up to 98 CRI LEDs with interchangeable optical systems.
- Advanced dimming options: DALI, 0-10V, DMX and Wireless dimming, down to 0.1%.

Compliance

UK CA CE

STOANE LIGHTING

ZTA.35.Surface.Framer

STD-000595-0083

Technical

Supply	Remote constant current LED driver required	
Light source	4mm LES COB	6mm LES COB
Initial output	**SL98** 4.3W 17.2Vf at 250mA 2400K · 355lm · 83lm/W 2700K · 418lm · 97lm/W 3000K · 446lm · 104lm/W 3500K · 446lm · 104lm/W 4000K · 471lm · 110lm/W	**SL98** 8.6W 34.4Vf at 250mA 2400K · 733lm · 85lm/W 2700K · 863lm · 100lm/W 3000K · 923lm · 107lm/W 3500K · 923lm · 107lm/W 4000K · 974lm · 113lm/W
Light distribution	Adjustable 15.7° - 32.5° Fixed 50.2°	Adjustable 15.6° - 31.7° Fixed 50°
Lumen maintenance	L90 B0 in excess of 94,000 hours	
Colour consistency	2 SDCM	
IP rating	IP20	
Weight	0.51kg	

Service Commitment

ReNew

5 Year Warranty
25 Year Duty of Care