STOANE
LIGHTING

ZTA.50.Mains Track.Framer

STD-000594-0080

Configured Product

Light Source

SL98

Light Source Size

9mm LES

CCT

3000K

Finish

Matt Black

Framer type

Adjustable Beam

Track adaptor colour

White

Dimming

Local Dim

Gobo Holder

No

Softening Diffuser/Accessory

No

STOANE
LIGHTING

ZTA.50.Mains Track.Framer

STD-000594-0080



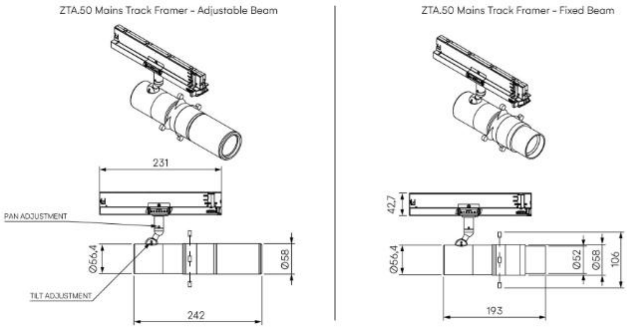

Modular high-performance, mains track-mounted spotlight system, for interior architectural applications such as Museums, Galleries and Retail. Engineered for exceptional durability, maintainability, re-manufacturability, and recyclability, this spotlight sets a new standard for sustainable design.

Product Description

ZTA.50.Mains Track.Framer is constructed from extruded and precision-machined recycled aluminium, the spotlight features an anodised and powder-coated finish for enhanced durability and aesthetics. Easily interchangeable between Framing projector, fixed optic, Wall Wash and Zoom options.

Fixed uses a Wide Flood spread for long throws. Adjustable uses a Zoom lens to allow the user to narrow in on very fine details. Both are capable of holding a gobo.

Key Features

- Sustainable construction: made from recycled aluminium with a long-lasting anodised and powder-coated finish.
- Framing attachment can be easily swapped to fixed optics, Zoom and Wall Wash.
- The easy-to-adjust fins allow for precision positioning to sharply define light on pieces of artwork.
- Versatile Adjustment: 363° pan rotation and 130° tilt with a lockable spot.
- Broad compatibility: 3-circuit adapter supports multiple track systems (Stucchi, Eutrac, Global Pulse).
- Advanced dimming options: On-board, DALI, 0-10V, and Wireless dimming, down to 0.1%.
- High-performance lighting: Up to 98 CRI LEDs with interchangeable optical systems.
- Ceiling mounting only: Designed exclusively for ceiling installations.



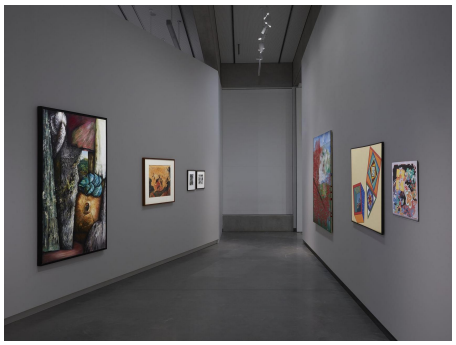



STOANE
LIGHTING

ZTA.50.Mains Track.Framer

STD-000594-0080

Compliance

UK CA CE

c ETL US LISTED
Intertek

STOANE LIGHTING

ZTA.50.Mains Track.Framer

STD-000594-0080

Technical

Supply	230V/240V via 3 circuit track
Light source	9mm LES COB
Initial output	**SL90** 11.8W 33.8Vf at 350mA 2700K • 1822lm • 154lm/W 3000K • 1908lm • 161lm/W 3500K • 1929lm • 163lm/W 4000K • 1919lm • 162lm/W **SL98** 10.6W 30.4Vf at 350mA 2400K • 1085lm • 102lm/W 2700K • 1205lm • 113lm/W 3000K • 1288lm • 121lm/W 3500K • 1313lm • 124lm/W 4000K • 1352lm • 127lm/W
Light distribution	Adjustable 10° to 28.9° Fixed 49.3°
Lumen maintenance	L90 B0 in excess of 94,000 hours
Colour consistency	2 SDCM
IP rating	IP20
Weight	1kg

STOANE
LIGHTING

ZTA.50.Mains Track.Framer

STD-000594-0080

Service Commitment



