STOANE
LIGHTING

ZTA.110.Surface

STD-000554-0039

Configured Product

Light Source

SL90

Light Source Size

14mm LES

CCT

3000K

Beam

Medium 24.6

Finish

Matt Black

Cable route

TBC

Cable Length

500mm

Secondary Lensing Accessories

With accessories

STOANE LIGHTING

ZTA.110.Surface

STD-000554-0039



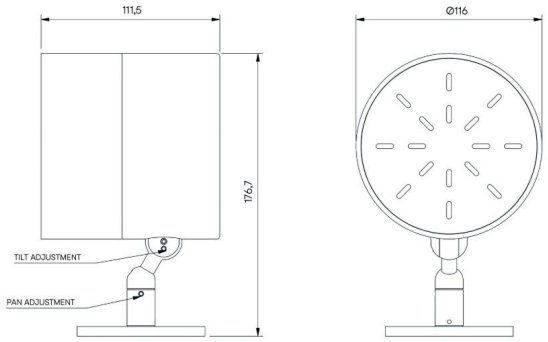

Modular high-performance, surface mounted spotlight system, for interior architectural applications such as Museums, Galleries, Retail and Workplace environments. Engineered for exceptional durability, maintainability, re-manufacturability, and recyclability, this spotlight sets a new standard for sustainable design.

Product Description

ZTA.110.Surface is constructed from extruded and precision-machined recycled aluminium, the spotlight features an anodised and powder-coated finish for enhanced durability and aesthetics.
The high-performance LED module boasts up to 98 CRI and comes with Interchangeable optics ranging from Very Narrow to Wide Flood options.
The spotlight can accommodate up to two lens accessories and multiple attachments, making it highly customisable for various lighting needs.

Key Features

• Sustainable construction: made from recycled aluminium with a long-lasting anodised and powder-coated finish. Specialist finishes available on request.
• Versatile adjustment: 363° pan rotation and 130° tilt with a lockable spot.
• High-performance lighting: up to 98 CRI LEDs with interchangeable optical systems.
• Customisable accessories: can house up to two lens accessories and various attachments.
• Advanced dimming options: DALI, 0-10V, and Wireless dimming, down to 0.1%.

STOANE LIGHTING

ZTA.110.Surface

STD-000554-0039





Compliance

UK CA CE

Technical

Supply	Remote constant current LED driver required	
Light source	6mm LES COB	14mm LES COB
Initial output	**SL90** 17.6W 35.1Vf at 500mA	**SL90** 30.7W 36.1Vf at 850mA
	2700K · 1972lm · 112lm/W 3000K · 2054lm · 117lm/W	2700K · 4232lm · 138lm/W 3000K · 4431lm · 144lm/W

STOANE LIGHTING

ZTA.110.Surface

STD-000554-0039

	3500K • 2074lm • 118lm/W 4000K • 2130lm • 121lm/W	3500K • 4482lm • 146lm/W 4000K • 4455lm • 145lm/W
	SL98 23.2W 38.6Vf at 600mA	SL98 32.7W 34.4Vf at 950mA
	2400K • 1566lm • 68lm/W 2700K • 1845lm • 80lm/W 3000K • 1971lm • 85lm/W 3500K • 1971lm • 85lm/W 4000K • 2081lm • 90lm/W	2400K • 3134lm • 96lm/W 2700K • 3542lm • 108lm/W 3000K • 3784lm • 116lm/W 3500K • 3888lm • 119lm/W 4000K • 3973lm • 122lm/W
Light distribution	Very Narrow 4.7° Narrow 10.5° Medium 24.7° Flood 34.1° Wide Flood 53.9° Extra Wide Flood 77.2°	Narrow 18.9° Medium 24.6° Flood 35.3° Wide Flood 59.8° Extra Wide Flood 78.4° Wall Wash 30.7° x 86°
Lumen maintenance	L90 B0 in excess of 94,000 hours	
Colour consistency	2 SDCM	
IP rating	IP20	
Weight	1.8kg	

Service Commitment

ReNew

5 Year Warranty
25 Year Duty of Care