STOANE
LIGHTING

Frog Zoom

STD-000546-0022

Configured Product

Light Source

SL90

Light Source Size

6mm LES

CCT

3000K

Beam

Zoom 16.6° - 44.3°

Finish

Matt Black

STOANE LIGHTING

Frog Zoom

STD-000546-0022



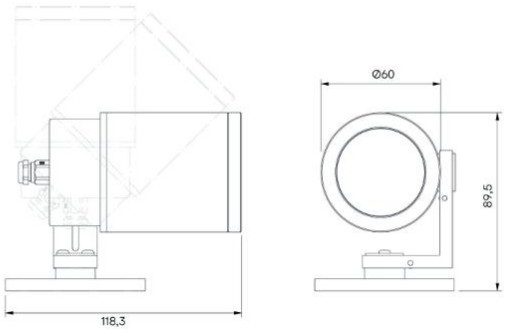

High-performance exterior spotlight system, for surface mounting to illuminate exterior architectural details and landscape illumination.

Product Description

The Frog Zoom is an IP66 exterior rated, adjustable and lockable spotlight. Constructed from precision-machined recycled aluminium, the spotlight features an anodised and powder-coated finish for enhanced durability and aesthetics. Provided with Zoom optics allowing adjustment from Narrow to Wide Flood beam options.

Key Features

• Sustainable construction: made from recycled aluminium with a weather resistant long-lasting anodised and powder-coated finish. Specialist finishes available on request.
• Zoomable beam allowing easy adjustment from Narrow to Wide Flood.
• Spike mount is also available.
• Advanced dimming options: DALI, 0-10V, DMX and Wireless dimming, down to 0.1%.
• High-performance lighting: up to 98 CRI LEDs with interchangeable optical systems.

Compliance

UK CA CE

c ETL us Intertek

STOANE LIGHTING

Frog Zoom

STD-000546-0022

Technical

Supply	Remote constant current LED driver required	
Light source	6mm LES COB	9mm LES COB
Initial output	**SL90** 8W 32Vf at 250mA 2700K • 1087lm • 136lm/W 3000K • 1133lm • 141lm/W 3500K • 1144lm • 143lm/W 4000K • 1175lm • 147lm/W **SL98** 8.6W 34.4Vf at 250mA 2400K • 733lm • 85lm/W 2700K • 863lm • 100lm/W 3000K • 923lm • 107lm/W 3500K • 923lm • 107lm/W 4000K • 974lm • 113lm/W	**SL90** 11.8W 33.8Vf at 350mA 2700K • 1822lm • 154lm/W 3000K • 1908lm • 161lm/W 3500K • 1929lm • 163lm/W 4000K • 1919lm • 162lm/W **SL98** 10.6W 30.4Vf at 350mA 2400K • 1085lm • 102lm/W 2700K • 1205lm • 113lm/W 3000K • 1288lm • 121lm/W 3500K • 1313lm • 124lm/W 4000K • 1352lm • 127lm/W
Light distribution	Zoom 16.6° - 44.3°	Zoom 20.7° - 43.6°
Lumen maintenance	L90 B0 in excess of 94,000 hours	
Colour consistency	2 SDCM	
IP rating	IP66	
Weight	0.6kg	

STOANE
LIGHTING

Frog Zoom

STD-000546-0022

Service Commitment



