STOANE
LIGHTING

Drop Pendant

STD-000540-0022

Configured Product

Light Source

SL90

Light Source Size

9mm LES

CCT

3500K

Finish

Anodised Brass/Bronze

Mounting Method

Bay Bar

Cable Length

500mm

STOANE LIGHTING

Drop Pendant

STD-000540-0022



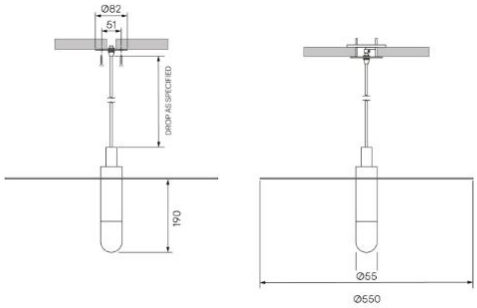

Pendant shade, for enhancing dining, workspace and feature areas.

Product Description

The Drop Pendant is a decorative pendant shade, engineered with a custom domed and frosted diffuser, to provide a soft and functional wash of light. Precision machined from recycled aluminium, including a decorative feature disc to enhance the light distribution. The product is height adjustable via a site cuttable suspension and power cable, with various cable colour options available.
It can be used individually or in clusters to create dynamic lighting arrangements.

Key Features

• Sustainable construction: made from recycled aluminium.
• Height adjustable suspension with various cable colour options.
• A soft glow of light via the custom frosted diffuser.
• Advanced dimming options: DALI, 0-10V, DMX and Wireless dimming, down to 0.1%.
• High-performance lighting: up to 98 CRI LEDs.





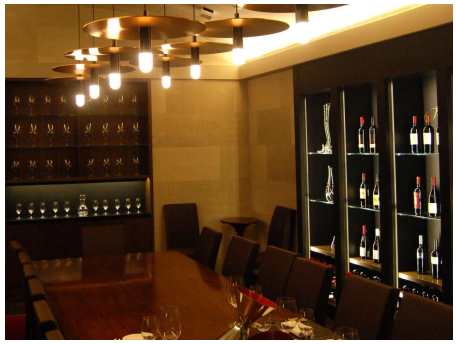

STOANE
LIGHTING

Drop Pendant

STD-000540-0022

Compliance

STOANE
LIGHTING

Drop Pendant

STD-000540-0022

Technical

Supply	Remote constant current LED driver required
Light source	9mm LES COB
Initial output	**SL90** 11.8W 33.8Vf at 350mA 2700K • 1822lm • 154lm/W 3000K • 1908lm • 161lm/W 3500K • 1929lm • 163lm/W 4000K • 1919lm • 162lm/W **SL98** 10.6W 30.4Vf at 350mA 2400K • 1085lm • 102m/W 2700K • 1205lm • 113lm/W 3000K • 1288lm • 121lm/W 3500K • 1313lm • 124lm/W 4000K • 1352lm • 127lm/W
Light distribution	Flood 116.8°
Lumen maintenance	L90 B0 in excess of 94,000 hours
Colour consistency	2 SDCM
IP rating	IP20
Weight	2.59kg

STOANE
LIGHTING

Drop Pendant

STD-000540-0022

Service Commitment



