STOANE
LIGHTING

Bolt-Pip

STD-000481-0005

Configured Product

CCT

2700K

Finish

Brass

STOANE LIGHTING

Bolt-Pip

STD-000481-0005

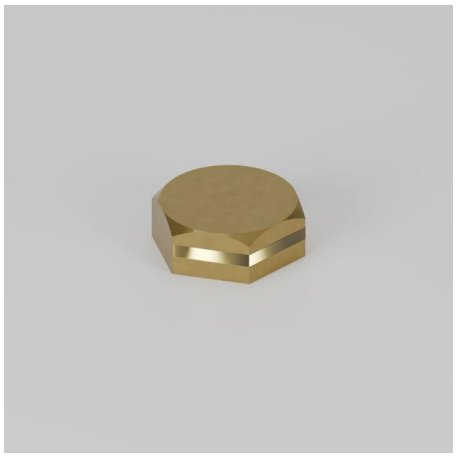

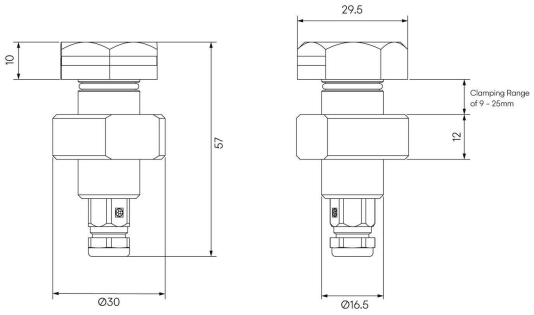

Miniature exterior semi-recessed marker light, providing soft and low levels of light for pathways to assist with wayfinding.

Product Description

The Bolt-Pip is a miniature IP66 rated marker light. Machined from Brass or 316 Stainless Steel for enhanced durability. It is useful for various applications such as pathway and step lighting and can be used both internally or externally.

Key Features

- Robust construction: made from Brass or 316 Stainless Steel. Specialist finishes available on request.
- Low levels of light distribution for visual comfort.
- Advanced dimming options: DALI, 0-10V, and Wireless dimming, down to 0.1%.
- High-performance lighting: up to 97 CRI LEDs.





STOANE
LIGHTING

Bolt-Pip

STD-000481-0005

Compliance

UK CA CE

Technical

Supply	Remote constant current LED driver required
Light source	SL Type S
Initial output	1.4W 2.8Vf at 500mA **80 CRI** 2200K • 116lm • 77lm/W **90 CRI** 2400K • 157lm • 115lm/W **95 CRI** 2700K • 125lm • 88lm/W 3000K • 133lm • 94lm/W 3500K • 140lm • 99lm/W 4000K • 148lm • 104lm/W
Light distribution	Elliptical 71.8° x 146°
Lumen maintenance	L70 B50 >66,000 hours
Colour consistency	2 SDCM
Colour maintenance	± 0.007 Δu'v'
IP rating	IP65
Weight	0.13kg

STOANE
LIGHTING

Bolt-Pip

STD-000481-0005

Service Commitment



