STOANE
LIGHTING

Cu-Pip

STD-000479-0033

Configured Product

CCT

3000K

Beam

Wide Flood 54.1°

Cable Length

500mm

STOANE LIGHTING

Cu-Pip

STD-000479-0033



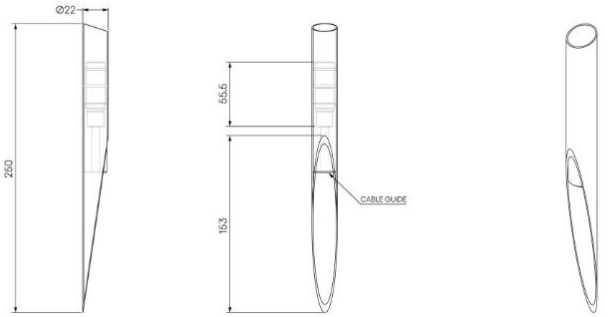

Award-winning exterior rated spike mounted light, designed to maintain precise focus with ease.

Product Description

The Cu-Pip design originated from a desire to create a simple, pared-back spike light.
Simplicity, durability, and minimal points of failure were key drivers. Equally important was minimising the overall manufacturing process and resource use. That's why Cu-Pip shares a large number of its build with Pipien.
The outer housing, machined from a single copper pipe, integrates both the ground spike and anti-glare snoot into a single artifact. With its natural finish, compact form, and elegant cable exit, the Cu-Pip almost disappears in any landscape. The internal LED module can be specified with a range of colour temperatures and site-changeable optics to hone the beam angle and glare control.

Key Features

- Robust construction: made from copper. Specialist finishes available on request.
- High levels of glare control and interchangeable optics.
- Advanced dimming options: DALI, 0-10V, and Wireless dimming, down to 0.1%.
- High-performance lighting: up to 97 CRI LEDs.



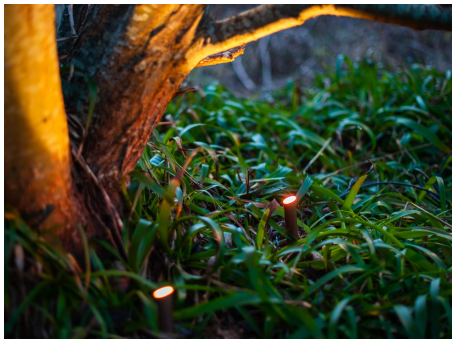

STOANE LIGHTING

Cu-Pip

STD-000479-0033

Compliance

UK CA CE

Technical

Supply	Remote constant current LED driver required
Light source	SL Type S
Initial output	**95 CRI** 1.4W 2.8Vf at 500mA 2700K • 125lm • 88lm/W 3000K • 133lm • 94lm/W 3500K • 140lm • 99lm/W 4000K • 148lm • 104lm/W
Light distribution	Medium 18.5° Flood 36.7° Wide Flood 54.1°
Lumen maintenance	L70 B50 >66,000 hours
Colour consistency	2 SDCM
Colour maintenance	± 0.007 Δu'v'
IP rating	IP66
Weight	0.17kg

STOANE
LIGHTING

Cu-Pip

STD-000479-0033

Service Commitment



