STOANE
LIGHTING

# Mushroom

STD-000411-0223

## Configured Product

Length

1005mm

Finish

Matt Black

No. of Circuits

One (Single Colour)

Mushroom Type

Mount Disc (buried)

Circuit 1 CCT

2700K

Circuit 1 CRI

95CRI

Circuit 2 CCT

N/A

Circuit 2 CRI

N/A

STOANE
LIGHTING

# Mushroom

STD-000411-0223



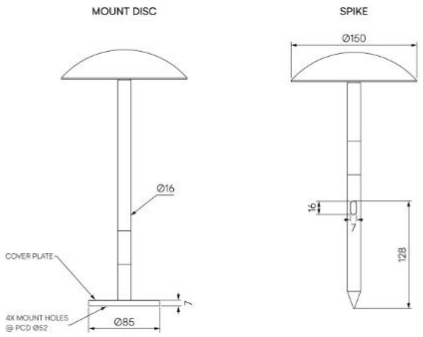


Exterior landscape accent lighting system, designed for both soft and hard landscaping applications, it can be used both in ground and on tabletops.

**Product Description**

The Mushroom is an IP66 rated exterior accent light, designed to provide a soft, low level, wide and 360° lighting distribution via a customised impact resistant frosted diffuser system, providing a BUG rating of B0 U0 G0.
Both spike and fixed mount plates available.
Machined from recycled aluminium with an anodised and powder-coated finish for enhanced durability.

**Key Features**

• Sustainable construction: made from recycled aluminium with a weather resistant long-lasting anodised and powder-coated finish. Specialist finishes available on request.
• Advanced dimming options: DALI, 0-10V, DMX and Wireless dimming, down to 0.1%.
• High-performance lighting: up to 97 CRI LEDs.
• Tuneable White and special SPD LEDs such as Reds or PC Amber are available on request.
• Ground spike and fixed mount plate options available for soft and hard landscaping applications.







STOANE
LIGHTING

# Mushroom

STD-000411-0223

## Compliance

STOANE LIGHTING

# Mushroom

STD-000411-0223

## Technical

| | |
|---|---|
| **Supply** | Remote constant current LED driver required |
| **Light source** | SL Star |
| **Initial output** | 8.4W 16.8Vf at 500mA<br><br>**80CRI**<br>2200K • 694lm • 79lm/W<br>**90 CRI**<br>2400K • 945lm • 114lm/W<br>**95 CRI**<br>2700K • 750lm • 88lm/W<br>3000K • 798lm • 94lm/W<br>3500K • 840lm • 99lm/W<br>4000K • 888lm • 104lm/W |
| **Light distribution** | Downward distribution 100.7° |
| **Lumen maintenance** | L70 B50 >66,000 hours |
| **Colour consistency** | 2 SDCM |
| **Colour maintenance** | ± 0.007 Δu'v' |
| **IP rating** | IP66 |
| **IK rating** | IK09 |
| **Weight** | 0.825kg |

STOANE
LIGHTING

# Mushroom

STD-000411-0223

---

## Service Commitment




