STOANE
LIGHTING

Mushroom

STD-000411-0212

Configured Product

Length

1205mm

Finish

Matt Black

No. of Circuits

One (Single Colour)

Mushroom Type

Spike

Circuit 1 CCT

2700K

Circuit 1 CRI

Custom

Circuit 2 CCT

N/A

Circuit 2 CRI

N/A

STOANE
LIGHTING

Mushroom

STD-000411-0212



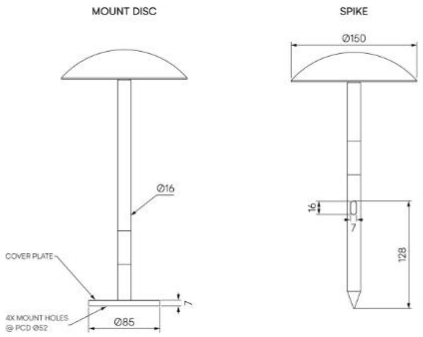

Exterior landscape accent lighting system, designed for both soft and hard landscaping applications, it can be used both in ground and on tabletops.

Product Description

The Mushroom is an IP66 rated exterior accent light, designed to provide a soft, low level, wide and 360° lighting distribution via a customised impact resistant frosted diffuser system, providing a BUG rating of B0 U0 G0.
Both spike and fixed mount plates available.
Machined from recycled aluminium with an anodised and powder-coated finish for enhanced durability.

Key Features

• Sustainable construction: made from recycled aluminium with a weather resistant long-lasting anodised and powder-coated finish. Specialist finishes available on request.
• Advanced dimming options: DALI, 0-10V, DMX and Wireless dimming, down to 0.1%.
• High-performance lighting: up to 97 CRI LEDs.
• Tuneable White and special SPD LEDs such as Reds or PC Amber are available on request.
• Ground spike and fixed mount plate options available for soft and hard landscaping applications.







STOANE
LIGHTING

Mushroom

STD-000411-0212

Compliance

STOANE
LIGHTING

Mushroom

STD-000411-0212

Technical

Supply	Remote constant current LED driver required
Light source	SL Star
Initial output	8.4W 16.8Vf at 500mA **80CRI** 2200K • 694lm • 79lm/W **90 CRI** 2400K • 945lm • 114lm/W **95 CRI** 2700K • 750lm • 88lm/W 3000K • 798lm • 94lm/W 3500K • 840lm • 99lm/W 4000K • 888lm • 104lm/W
Light distribution	Downward distribution 100.7°
Lumen maintenance	L70 B50 >66,000 hours
Colour consistency	2 SDCM
Colour maintenance	± 0.007 Δu'v'
IP rating	IP66
IK rating	IK09
Weight	0.825kg

STOANE
LIGHTING

Mushroom

STD-000411-0212

Service Commitment



