STOANE
LIGHTING

Amanita

STD-000409-0035

Configured Product

CCT

2700K

Finish

Matt Black

Mounting Method

Spike

Cable Length

500mm

Stem Height

750mm

STOANE LIGHTING

Amanita

STD-000409-0035



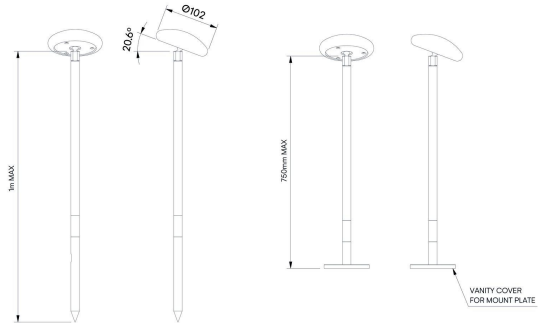

Exterior landscape accent lighting system, designed for both soft and hard landscaping applications, it can be used both in ground and on tabletops.

Product Description

The Amanita is a small form factor IP66 rated exterior accent light, designed to provide a soft, low level, 360° lighting distribution via a customised impact resistant frosted diffuser.
When orientated directly downwards the product provides a **BUG rating** of B0 U0 G0.
Providing up to 20.6° of lockable tilt adjustment and both spike and fixed mount plates available.

Key Features

- Sustainable construction: made from recycled aluminium with a weather resistant long-lasting anodised and powder-coated finish. Specialist finishes available on request.
- Versatile adjustment providing up to 20.6° of tilt with locking mechanism.
- Advanced dimming options: DALI, 0-10V, and Wireless dimming, down to 0.1%.
- High-performance lighting: Up to 97 CRI LEDs.
- Special SPD LEDs available on request.
- Ground spike and fixed mount plate options available for soft and hard landscaping applications.

Compliance

UK CA CE

STOANE
LIGHTING

Amanita

STD-000409-0035

Technical

Supply	Remote constant current LED driver required
Light source	SL Star
Initial output	6W 8.9Vf at 700mA **80CRI** 2200K • 450lm • 72lm/W **90CRI** 2400K • 630lm • 109lm/W **95CRI** 2700K • 501lm • 82lm/W 3000K • 531lm • 87lm/W 3500K • 561lm • 92lm/W 4000K • 591lm • 97lm/W
Light distribution	Downward 96.2°
Lumen maintenance	L70 B50 >66,000 hours
Colour consistency	2 SDCM
Colour maintenance	± 0.007 Δu'v'
IP rating	IP66
Weight	0.65kg

STOANE
LIGHTING

Amanita

STD-000409-0035

Service Commitment



