STOANE
LIGHTING

# The Workplace Light (Desk Clamp)

STD-000400-0013

## Configured Product

Finish

Anodised Clear

End Caps

Recycled Plastic

Stem Height

650mm

STOANE LIGHTING

# The Workplace Light (Desk Clamp)

STD-000400-0013



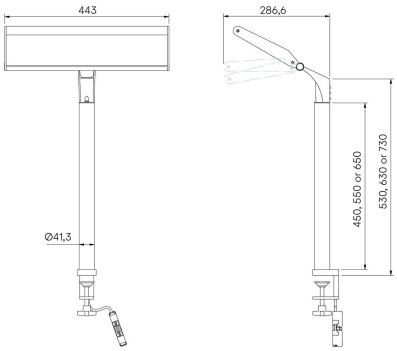


Versatile task lighting system, designed to provide good quality working light whilst enhancing  alertness, improving mood and sleep.

**Product Description**

The Workplace Light has been at the heart of research conducted with UK lighting designers and UCL indicating that working with >250 m-EDI lux vertical to the eye for the earlier portion of the day (countered with significantly less in the latter part of the day, and virtually none after bedtime), can improve productivity, mood and sleep.
Fitted with innovative optical system to ensure maximum visual comfort and optimised m-EDI lux delivery.
Includes both a desk clamp and through-desk mounted version. Also capable of monitor mounting.

**Key Features**

• Designed based on extensive research examining healthy light.
• Innovative optical system to ensure visual comfort and optimisation of m-EDI lux delivery.
• Sustainable construction: made from recycled aluminium with a long-lasting anodised finish. Specialist finishes available on request.
• Advanced dimming options: Wireless dimming, down to 0.1%.

The Workplace Light



STOANE LIGHTING

# The Workplace Light (Desk Clamp)

STD-000400-0013

## Compliance

UK CA CE

---

## Service Commitment

ReNew

5 Year Warranty
25 Year Duty of Care

---

## Technical

| | |
|---|---|
| | 95 CRI |
| Light Source | 1505lm delivered output at 2700K<br>1468lm delivered output at 5700K |
| Light Distribution | 93.5° |