STOANE
LIGHTING

The Workplace Light (Desk Clamp)

STD-000400-0011

Configured Product

Finish

Anodised Black

End Caps

TBD

Stem Height

550mm

STOANE LIGHTING

The Workplace Light (Desk Clamp)

STD-000400-0011



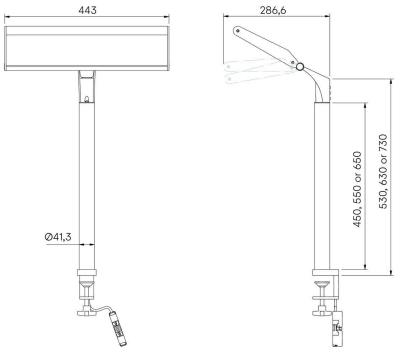

Versatile task lighting system, designed to provide good quality working light whilst enhancing alertness, improving mood and sleep.

Product Description

The Workplace Light has been at the heart of research conducted with UK lighting designers and UCL indicating that working with >250 m-EDI lux vertical to the eye for the earlier portion of the day (countered with significantly less in the latter part of the day, and virtually none after bedtime), can improve productivity, mood and sleep.
Fitted with innovative optical system to ensure maximum visual comfort and optimised m-EDI lux delivery.
Includes both a desk clamp and through-desk mounted version. Also capable of monitor mounting.

Key Features

• Designed based on extensive research examining healthy light.
• Innovative optical system to ensure visual comfort and optimisation of m-EDI lux delivery.
• Sustainable construction: made from recycled aluminium with a long-lasting anodised finish. Specialist finishes available on request.
• Advanced dimming options: Wireless dimming, down to 0.1%.

The Workplace Light



STOANE LIGHTING

The Workplace Light (Desk Clamp)

STD-000400-0011

Compliance

UK CA CE

Service Commitment

ReNew

5 Year Warranty
25 Year Duty of Care

Technical

	95 CRI
Light Source	1505lm delivered output at 2700K 1468lm delivered output at 5700K
Light Distribution	93.5°