STOANE
LIGHTING

Pipien Spike

STD-000382-0001

Configured Product

CCT

TBC

Beam

TBC

Finish

TBC

Attachments

TBC

Cable Length

TBC

STOANE LIGHTING

Pipien Spike

STD-000382-0001



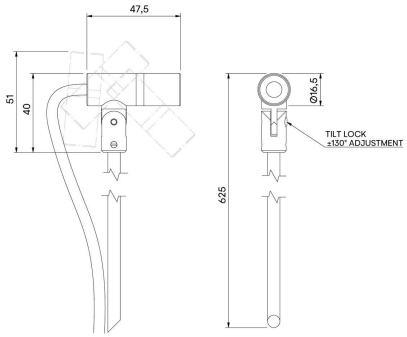

Miniature exterior spotlight system, for soft landscaping to illuminate exterior architectural details and landscape illumination. Read Pipien's professional review here.

Product Description
The Pipien Spike is a miniature IP66 exterior rated, adjustable and lockable spotlight.
Constructed from precision-machined recycled aluminium, the spotlight features an anodised and powder-coated finish for enhanced durability and aesthetics.

Key Features
• Sustainable construction: made from recycled aluminium with a weather resistant long-lasting anodised and powder-coated finish. Specialist finishes available on request.
• Fixed optics can be easily swapped from Very Narrow to Flood to elliptical beam options
• Snoot and Cowl options available.
• Surface mounted options available.
• Advanced dimming options: DALI, 0-10V, DMX and Wireless dimming, down to 0.1%.
• High-performance lighting: up to 98 CRI LEDs with interchangeable optical systems.



STOANE
LIGHTING

Pipien Spike

STD-000382-0001

Compliance

STOANE LIGHTING

Pipien Spike

STD-000382-0001

Technical

Supply	Remote constant current LED driver required
Light source	SL Type S
Initial output	1.4W 2.8Vf at 500mA **80CRI** 2200K • 116lm • 77lm/W **90CRI** 2400K • 157lm • 115lm/W **95CRI** 2700K • 125lm • 82lm/W 3000K • 133lm • 94lm/W 3500K • 140lm • 99lm/W 4000K • 148lm • 104lm/W
Light distribution	Medium 18.5° Flood 36.7° Wide Flood 54.1° Elliptical 17.1° x 34.5°
Lumen maintenance	L70 B50 >66,000 hours
Colour consistency	2 SDCM
Colour maintenance	± 0.007 Δu'v'
IP rating	IP66
Weight	0.075kg

STOANE
LIGHTING

Pipien Spike

STD-000382-0001

Service Commitment



