STOANE
LIGHTING

Surf Type G

STD-000296-0193

Configured Product

CCT

TBC

Beam

TBC

Finish

Matt Black

Attachments

TBC

Cable route

TBC

Secondary Lensing Accessories

TBC

STOANE
LIGHTING

Surf Type G

STD-000296-0193

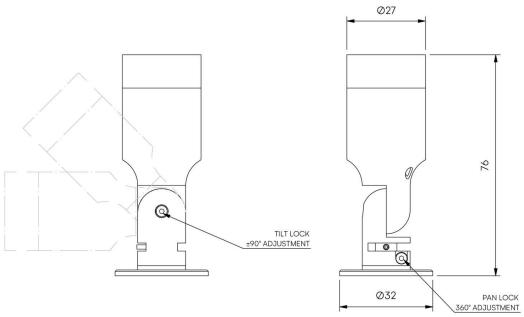

Compact lighting system for Museum, Gallery and Retail displays.

Product Description
The Surf Type G is a compact adjustable and highly efficient miniature fixture designed to provide precise illumination for Museum, Gallery and Retail applications. With both pan and tilt locking mechanisms.
Constructed from precision-machined recycled aluminium, the system features an anodised finish for enhanced durability and aesthetics.

Key Features
• Sustainable construction: made from recycled aluminium with a long-lasting anodised finish. Specialist finishes available on request.
• Tree system height and number of plug in points can be specified.
• Fixed interchangeable optics available ranging from Very narrow to Wide Flood to elliptical beam options.
• Lockable Tilt and Pan mechanisms.
• Advanced dimming options: DALI, 0-10V, DMX and Wireless dimming, down to 0.1%.
• High-performance lighting: Up to 97 CRI LEDs

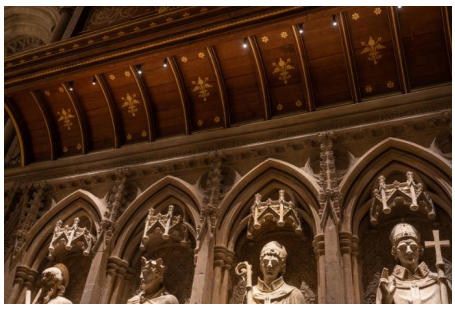

STOANE
LIGHTING

Surf Type G

STD-000296-0193

Compliance

UK CA CE

C ETL LISTED US
Intertek

STOANE
LIGHTING

Surf Type G

STD-000296-0193

Technical

Supply	Remote constant current LED driver required
Light source	SL Star
Initial output	**95CRI** 3.1W 3Vf at 1050mA 2700K · 232lm · 73lm/W 3000K · 246lm · 78lm/W 3500K · 260lm · 82lm/W 4000K · 274lm · 87lm/W
Light distribution	Very Narrow 8.6° Narrow 12.1° Medium 15.7° Flood 28.7° Wide Flood 51.3° Elliptical 12° x 46.2°
Lumen maintenance	L70 B50 >66,000 hours
Colour consistency	2 SDCM
Colour maintenance	± 0.007 Δu'v'
IP rating	IP20
Weight	0.07kg

STOANE
LIGHTING

Surf Type G

STD-000296-0193

Service Commitment

ReNew

5 Year Warranty
25 Year Duty of Care