STOANE LIGHTING

EQUIPMENT DESIGN + MANUFACTURE

Surf Type G
STD-000296-0046

Compact lighting system for Museum, Gallery and Retail displays.

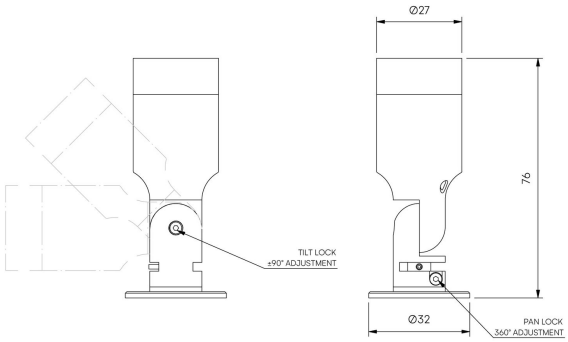

Product Description

The Surf Type G is a compact adjustable and highly efficient miniature fixture designed to provide precise illumination for Museum, Gallery and Retail applications. With both pan and tilt locking mechanisms.
Constructed from precision-machined recycled aluminium, the system features an anodised finish for enhanced durability and aesthetics.

Key Features

- Sustainable construction: made from recycled aluminium with a long-lasting anodised finish. Specialist finishes available on request.
- Tree system height and number of plug in points can be specified.
- Fixed interchangeable optics available ranging from Very narrow to Wide Flood to elliptical beam options.
- Lockable Tilt and Pan mechanisms.
- Advanced dimming options: DALI, 0-10V, DMX and Wireless dimming, down to 0.1%.
- High-performance lighting: Up to 97 CRI LEDs

STOANE LIGHTING

EQUIPMENT DESIGN + MANUFACTURE

Surf Type G
STD-000296-0046

Configured Product

CCT

2700K

Beam

Flood 29.8°

Finish

Please contact us for custom finishing requirements

TBC

Attachments

None

Cable route

TBC

Secondary Lensing Accessories

Without accessories