STOANE
LIGHTING

Surf Type G

STD-000296-0040

Configured Product

CCT

2700K

Beam

TBC

Finish

Custom Anodised

Attachments

None

Cable route

TBC

Secondary Lensing Accessories

With accessories

STOANE LIGHTING

Surf Type G

STD-000296-0040



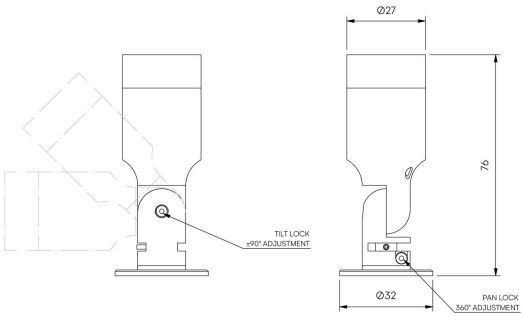

Compact lighting system for Museum, Gallery and Retail displays.

Product Description
The Surf Type G is a compact adjustable and highly efficient miniature fixture designed to provide precise illumination for Museum, Gallery and Retail applications. With both pan and tilt locking mechanisms.
Constructed from precision-machined recycled aluminium, the system features an anodised finish for enhanced durability and aesthetics.

Key Features
• Sustainable construction: made from recycled aluminium with a long-lasting anodised finish. Specialist finishes available on request.
• Tree system height and number of plug in points can be specified.
• Fixed interchangeable optics available ranging from Very narrow to Wide Flood to elliptical beam options.
• Lockable Tilt and Pan mechanisms.
• Advanced dimming options: DALI, 0-10V, DMX and Wireless dimming, down to 0.1%.
• High-performance lighting: Up to 97 CRI LEDs



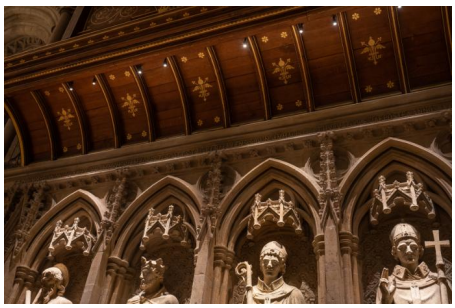

STOANE
LIGHTING

Surf Type G

STD-000296-0040

Compliance

UK CA CE

c ETL US LISTED
Intertek

STOANE LIGHTING

Surf Type G

STD-000296-0040

Technical

Supply	Remote constant current LED driver required
Light source	SL Star
Initial output	3.1W 3Vf at 1050mA **80 CRI** 2200K • 199lm • 60lm/W **90 CRI** 2400K • 290lm • 97lm/W **95 CRI** 2700K • 232lm • 73lm/W 3000K • 246lm • 78lm/W 3500K • 260lm • 82lm/W 4000K • 274lm • 87lm/W
Light distribution	Very Narrow 8.6° Narrow 12.1° Medium 15.7° Flood 28.7° Wide Flood 51.3° Elliptical 12° x 46.2°
Lumen maintenance	L70 B50 >66,000 hours
Colour consistency	2 SDCM
Colour maintenance	± 0.007 Δu'v'
IP rating	IP20
Weight	0.07kg

STOANE
LIGHTING

Surf Type G

STD-000296-0040

Service Commitment



