STOANE
LIGHTING

Wall Scoop

STD-000277-0019

Configured Product

CCT

2700K

Finish

Custom Painted

STOANE LIGHTING

Wall Scoop

STD-000277-0019

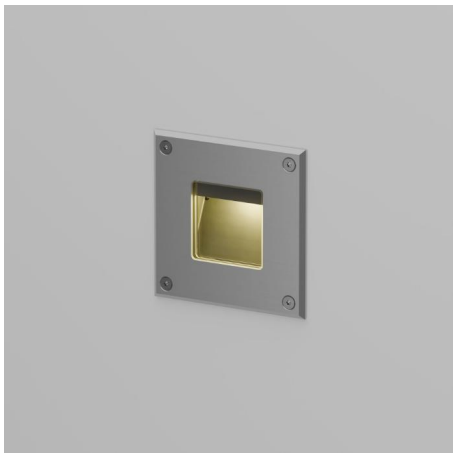

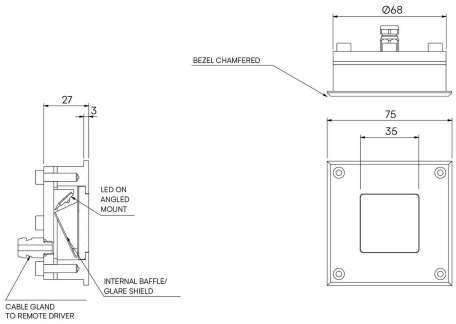

Exterior recessed fixed focus wall light, for enhancing architectural details, gardens and pathways.

Product Description

The Wall Scoop is an IP66 and robust IK10 rated fixed recessed wall light, for use at low level and designed to highlight pathways and stairs. Perfect for both commercial and residential applications, ideal for bringing landscapes to life after dark.

Machined from 316 Grade Stainless Steel and a toughened glass lens.

Key Features

• Robust construction: made from 316 Grade Stainless Steel. Specialist finishes such as C5M coatings available on request suitable for marine environments.
• Includes a custom kick reflector and glare baffle for beam control.
• Advanced dimming options: DALI, 0-10V, and Wireless dimming, down to 0.1%.
• High-performance lighting: up to 97 CRI LEDs.



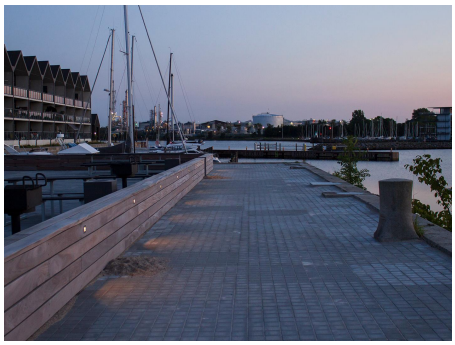

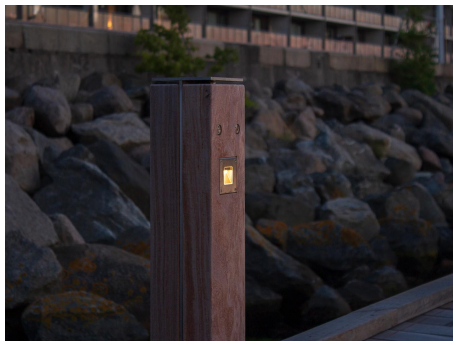

STOANE
LIGHTING

Wall Scoop

STD-000277-0019

Compliance

UK CA CE

STOANE LIGHTING

Wall Scoop

STD-000277-0019

Technical

Supply	Remote constant current LED driver required
Light source	Extended Type S
Initial output	3.1W 3Vf at 1050mA **80CRI** 2200K • 199lm • 60lm/W **90CRI** 2400K • 290lm • 97lm/W **95CRI** 2700K • 232lm • 73lm/W 3000K • 246lm • 78lm/W 3500K • 260lm • 82lm/W 4000K • 274lm • 87lm/W
Light distribution	Flood 58.2 x 72.2°
Lumen maintenance	L70 B50 >66,000 hours
Colour consistency	2 SDCM
Colour maintenance	± 0.007 Δu'v'
IP rating	IP66
IK rating	IK10
Weight	0.6kg

STOANE
LIGHTING

Wall Scoop

STD-000277-0019

Service Commitment



