STOANE
LIGHTING

Path Bandit

STD-000100-0004

Configured Product

CCT

2700K

Length

Standard Length

Finish

Standard Painted

Cable Length

Custom

STOANE LIGHTING

Path Bandit

STD-000100-0004



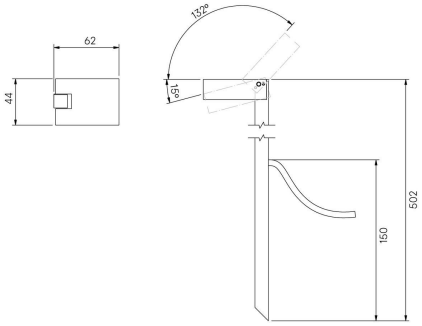

Low level exterior rated adjustable spike light, providing soft and wide light distribution for pathways.

Product Description
The Path Bandit is an IP66 rated pathway light. Machined from recycled aluminium. It is useful for various applications such as pathway and step lighting and can be used both internally or externally.

Key Features
• Tilt adjustable and lockable luminaire head.
• Soft and wide beam wash effect.
• Advanced dimming options: DALI, 0-10V, and Wireless dimming, down to 0.1%.
• High-performance lighting: up to 97 CRI LEDs.



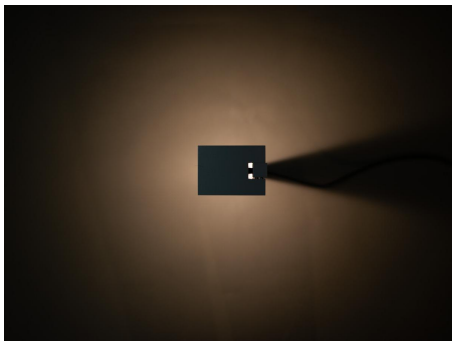



Compliance

UK CA CE

STOANE LIGHTING

Path Bandit

STD-000100-0004

Technical

Supply	Remote constant current LED driver required
Light source	SL Star
Initial output	2W 2.9Vf at 700mA **80CRI** 2200K • 150lm • 71lm/W **90CRI** 2400K • 210lm • 105lm/W **95CRI** 2700K • 167lm • 82lm/W 3000K • 177lm • 87lm/W 3500K • 187lm • 92lm/W 4000K • 197lm • 97lm/W
Light distribution	Downward distribution 82.6°
Lumen maintenance	L70 B50 >66,000 hours
Colour consistency	2 SDCM
Colour maintenance	± 0.007 Δu'v'
IP rating	IP66
Weight	0.206kg

STOANE
LIGHTING

Path Bandit

STD-000100-0004

Service Commitment



