STOANE
LIGHTING

Path Bandit

STD-000100-0001

Configured Product

CCT

3000K

Length

Custom Length

Finish

Standard Painted

Cable Length

TBC

STOANE LIGHTING

Path Bandit

STD-000100-0001



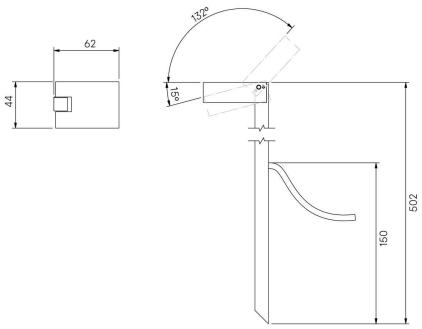

Low level exterior rated adjustable spike light, providing soft and wide light distribution for pathways.

Product Description
The Path Bandit is an IP66 rated pathway light. Machined from recycled aluminium. It is useful for various applications such as pathway and step lighting and can be used both internally or externally.

Key Features
• Tilt adjustable and lockable luminaire head.
• Soft and wide beam wash effect.
• Advanced dimming options: DALI, 0-10V, and Wireless dimming, down to 0.1%.
• High-performance lighting: up to 97 CRI LEDs.



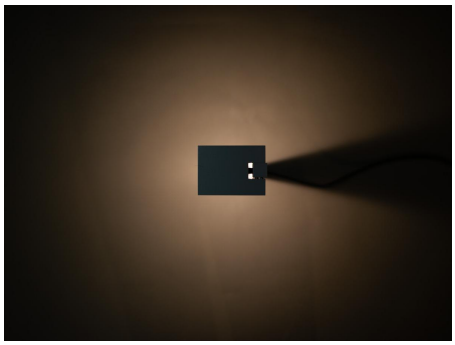



Compliance

UK CA CE

STOANE LIGHTING

Path Bandit

STD-000100-0001

Technical

Supply	Remote constant current LED driver required
Light source	SL Star
Initial output	2W 2.9Vf at 700mA **80CRI** 2200K • 150lm • 71lm/W **90CRI** 2400K • 210lm • 105lm/W **95CRI** 2700K • 167lm • 82lm/W 3000K • 177lm • 87lm/W 3500K • 187lm • 92lm/W 4000K • 197lm • 97lm/W
Light distribution	Downward distribution 82.6°
Lumen maintenance	L70 B50 >66,000 hours
Colour consistency	2 SDCM
Colour maintenance	± 0.007 Δu'v'
IP rating	IP66
Weight	0.206kg

STOANE
LIGHTING

Path Bandit

STD-000100-0001

Service Commitment



