STOANE
LIGHTING

Baby Badger

STD-000072-0006

Configured Product

CCT

3000K

Beam

Custom

Finish

Anodised Clear

Mounting Method

Screw

STOANE LIGHTING

Baby Badger

STD-000072-0006



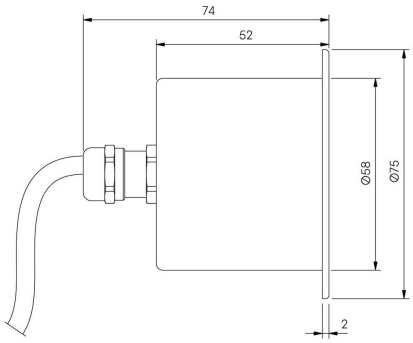

Exterior in-ground recessed adjustable and lockable uplighter, for enhancing architectural details, gardens and pathways.

Product Description
The Baby Badger is a small form factor IP66 rated adjustable and lockable exterior up light, designed to precisely highlight textures, add depth to trees, sculptures, facades and other outdoor features. Perfect for both commercial and residential applications, ideal for bringing landscapes to life after dark.

Key Features
- Sustainable construction: made from recycled aluminium with a weather resistant long-lasting anodised and powder-coated finish. Specialist finishes available on request.
- Adjustment providing up to +/- 12° of tilt with locking mechanism and pan rotation.
- Interchangeable optics to allow Very Narrow to Wide Flood to elliptical beam options and a toughened glass lens.
- Advanced dimming options: DALI, 0-10V, and Wireless dimming, down to 0.1%.
- High-performance lighting: Up to 97 CRI LEDs.
- First fix Installation sleeve available for mounting.

Compliance

UK CA CE

STOANE LIGHTING

Baby Badger

STD-000072-0006

Technical

Supply	Remote constant current LED driver required
Light source	SL Star
Initial output	2W 2.9Vf at 700mA **80 CRI** 2200K • 150lm • 71lm/W **90 CRI** 2400K • 210lm • 105lm/W **95CRI** 2700K • 167lm • 82lm/W 3000K • 177lm • 87lm/W 3500K • 187lm • 92lm/W 4000K • 197lm • 97lm/W
Light distribution	Very Narrow 9.9° Narrow 12.6° Medium 16.3° Flood 33.9° Wide Flood 68.6° Elliptical 12.9° x 47.8°
Lumen maintenance	L70 B50 >66,000 hours
Colour consistency	2 SDCM
Colour maintenance	± 0.007 Δu'v'
IP rating	IP66
Weight	0.33kg

STOANE
LIGHTING

Baby Badger

STD-000072-0006

Service Commitment



