STOANE
LIGHTING

Orb

STD-000047-0013

Configured Product

CCT

2700K

Finish

Anodised Clear

Mounting Method

Screw

Diffuser

Opalised

Cable Length

2000mm

Size

ø98mm

STOANE LIGHTING

Orb

STD-000047-0013



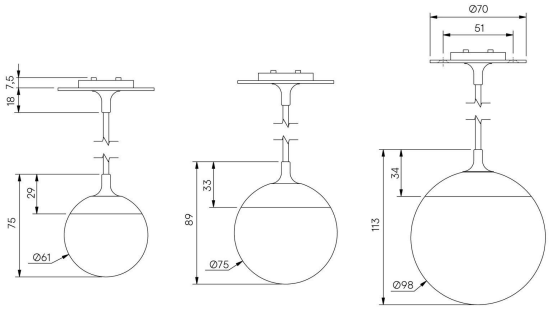

Decorative globe pendant, for enhancing dining, workspace and feature areas.

Product Description

The Orb is a family of three sizes of decorative pendants, for either stand alone use or integration into a larger feature chandelier. Available in three standard diameters, it can be provided with recycled clear, satin frosted or Opal diffuser options.

Constructed from precision-machined recycled aluminium, the product features an anodised finish with the option of a powder-coated finish for enhanced durability and aesthetics.

Key Features

• Sustainable construction: made from recycled aluminium with a long-lasting anodised and powder-coated finish. Specialist finishes available on request.
• Three different diameter and diffuser options.
• RGBW and Tuneable White options for dynamic lighting effects.
• Height adjustable suspension and power cabling
• Customised mounting solutions for both stand along and large feature lighting options.
• Advanced dimming options: DALI, 0-10V, DMX and Wireless dimming, down to 0.1%.
• High-performance lighting: up to 97 CRI LEDs with interchangeable optical systems.

Acrylic Diffuser

While both opalised and frosted acrylic diffuse light, our 70% recycled opalised acrylic has a milky, translucent and terrazzo like appearance that blocks more light and hides details, whereas frosted acrylic has a matte surface that allows more light transmission and provides a degree of obscuration.





STOANE LIGHTING

Orb

STD-000047-0013

Compliance

Technical

Supply	Remote constant current LED driver required
Light source	SL Star
Initial output	2W 2.9Vf at 700mA **80CRI** 2200K • 150lm • 71lm/W **90CRI** 2400K • 210lm • 105lm/W **95CRI** 2700K • 167lm • 82lm/W 3000K • 177lm • 87lm/W 3500K • 187lm • 92lm/W 4000K • 197lm • 97lm/W
Light distribution	Ø61mm Opalised 217.7° Ø61mm Frosted 121° Ø75mm Opalised 247.2° Ø75mm Frosted 113.5° Ø98mm Opalised 267.4° Ø98mm Frosted 107.9°
Lumen maintenance	L70 B50 >66,000 hours
Colour consistency	2 SDCM
Colour maintenance	± 0.007 Δu'v'

STOANE
LIGHTING

Orb

STD-000047-0013

IP rating	IP20
Weight	Ø61mm 0.22kg Ø75mm 0.35kg Ø98mm 0.7kg

Service Commitment

ReNew

5 Year Warranty
25 Year Duty of Care