STOANE
LIGHTING

# Tadpole

STD-000030-0132

## Configured Product

CCT

3000K

Beam

Medium 16.4°

Finish

Anodised Black

Attachments

None

Cable route

Through Base

Cable Length

500mm

STOANE LIGHTING

# Tadpole

STD-000030-0132



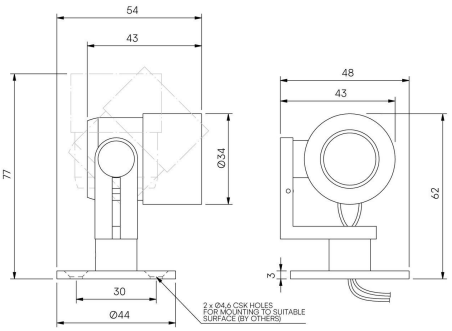


High-performance exterior spotlight system, for surface mounting to illuminate exterior architectural details and landscape illumination.

**Product Description**

The Tadpole is an IP66 exterior rated, adjustable and lockable spotlight.
Constructed from precision-machined recycled aluminium, the spotlight features an anodised and powder-coated finish for enhanced durability and aesthetics.
Provided with interchangeable optics from Very Narrow to Wide Flood to elliptical beams. Additional mounting options for spike and surface mount applications.

**Key Features**

• Sustainable construction: made from recycled aluminium with a weather resistant long-lasting anodised and powder-coated finish. Specialist finishes available on request.
• Fixed optics can be easily swapped from Very Narrow to Flood to elliptical beam options
• Snoot and Cowl options available.
• Wall and Spike mounted options available.
• Advanced dimming options: DALI, 0-10V, DMX and Wireless dimming, down to 0.1%.
• High-performance lighting: up to 97 CRI LEDs with interchangeable optical systems.

STOANE LIGHTING

# Tadpole

STD-000030-0132



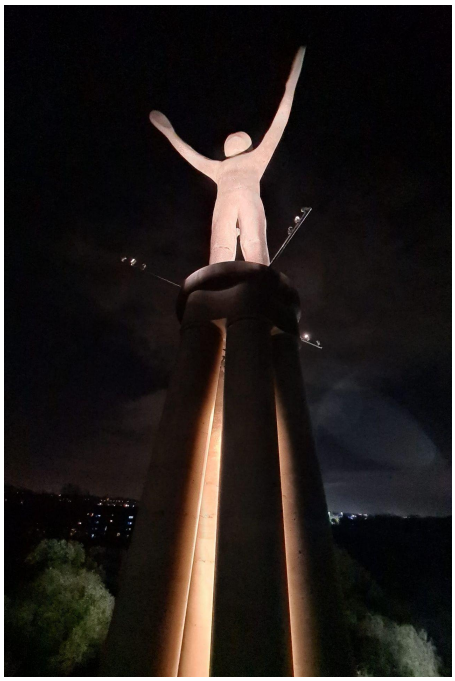

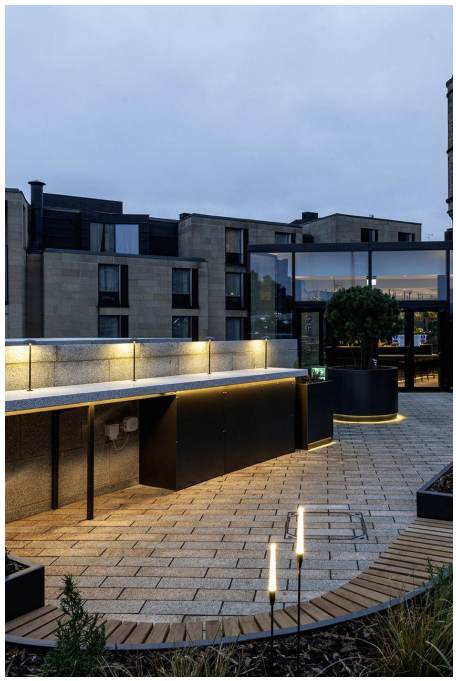

## Compliance

STOANE LIGHTING

# Tadpole

STD-000030-0132

## Technical

| | |
|---|---|
| **Supply** | Remote constant current LED driver required |
| **Light source** | SL Star |
| **Initial output** | 2W 2.9Vf at 700mA<br><br>**80CRI**<br>2200K • 150lm • 71lm/W<br>**90CRI**<br>2400K • 210lm • 105lm/W<br>**95CRI**<br>2700K • 167lm • 82lm/W<br>3000K • 177lm • 87lm/W<br>3500K • 187lm • 92lm/W<br>4000K • 197lm • 97lm/W |
| **Light distribution** | Very Narrow 8.9°<br>Narrow 11.5°<br>Medium 16.4°<br>Flood 37.7°<br>Wide Flood 60.6°<br>Elliptical 16.1° x 47.3° |
| **Lumen maintenance** | L70 B50 >66,000 hours |
| **Colour consistency** | 2 SDCM |
| **Colour maintenance** | ± 0.007 Δu'v' |
| **IP rating** | IP66 |
| **Weight** | 0.116kg |

STOANE
LIGHTING

# Tadpole

STD-000030-0132

---

## Service Commitment




