STOANE LIGHTING

EQUIPMENT DESIGN + MANUFACTURE

Tadpole

STD-000030-0122

Configured Product

CCT

3000K

Beam

Medium 21.3°

Finish

Anodised Clear

Attachments

Straight/Slash reversible snoot (specified separately)

Cable route

Flying Lead

Cable Length

500mm

STOANE LIGHTING

EQUIPMENT DESIGN + MANUFACTURE

Tadpole

STD-000030-0122

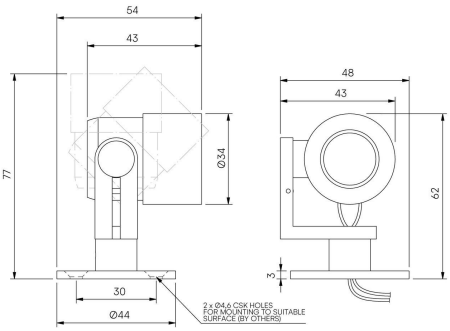

High-performance exterior spotlight system, for surface mounting to illuminate exterior architectural details and landscape illumination.

Product Description

The Tadpole is an IP66 exterior rated, adjustable and lockable spotlight.
Constructed from precision-machined recycled aluminium, the spotlight features an anodised and powder-coated finish for enhanced durability and aesthetics.
Provided with interchangeable optics from Very Narrow to Wide Flood to elliptical beams. Additional mounting options for spike and surface mount applications.

Key Features

• Sustainable construction: made from recycled aluminium with a weather resistant long-lasting anodised and powder-coated finish. Specialist finishes available on request.
• Fixed optics can be easily swapped from Very Narrow to Flood to elliptical beam options
• Snoot and Cowl options available.
• Wall and Spike mounted options available.
• Advanced dimming options: DALI, 0-10V, DMX and Wireless dimming, down to 0.1%.
• High-performance lighting: up to 97 CRI LEDs with interchangeable optical systems.

STOANE LIGHTING

EQUIPMENT DESIGN + MANUFACTURE

Tadpole

STD-000030-0122

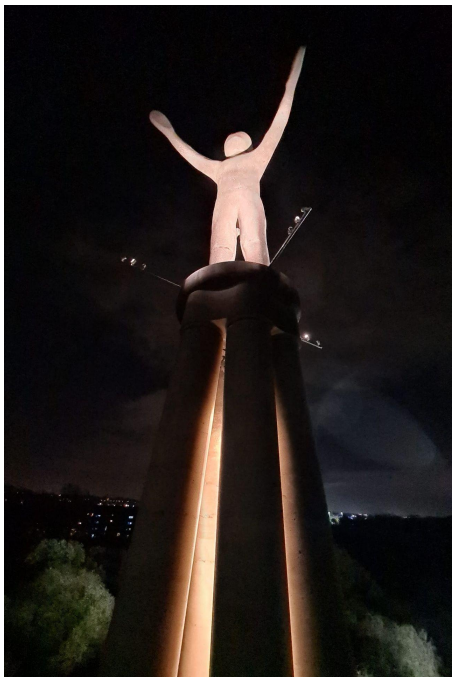

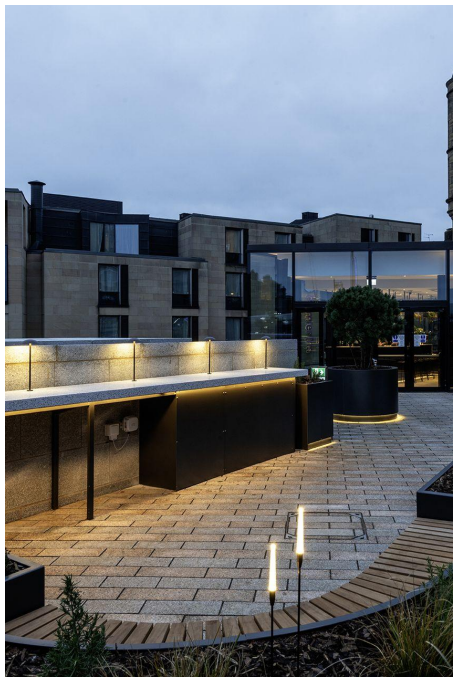

Compliance

UKCA CE

c ETL US LISTED Intertek

STOANE LIGHTING

EQUIPMENT DESIGN + MANUFACTURE

Tadpole

STD-000030-0122

Technical

Supply	Remote constant current LED driver required
Light source	SL Star
Initial output	**95CRI** 2W 2.8Vf at 700mA 2700K · 179lm · 90lm/W 3000K · 192lm · 96lm/W 3500K · 204lm · 102lm/W 4000K · 219lm · 110lm/W
Light distribution	Very Narrow 8.5° Narrow 12.4° Medium 21.3° Flood 41.3° Wide Flood 53.7° Elliptical 12.6° x 46.9°
Lumen maintenance	L70 B50 >66,000 hours
Colour consistency	2 SDCM
Colour maintenance	± 0.007 Δu'v'
IP rating	IP66
Weight	0.116kg

Service Commitment

ReNew

5 Year Warranty
25 Year Duty of Care