STOANE
LIGHTING

Tadpole

STD-000030-0001

Configured Product

CCT

TBC

Beam

TBC

Finish

TBC

Attachments

TBC

Cable route

TBC

Cable Length

TBC

STOANE LIGHTING

Tadpole

STD-000030-0001



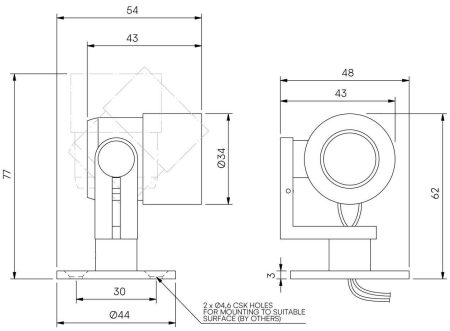

High-performance exterior spotlight system, for surface mounting to illuminate exterior architectural details and landscape illumination.

Product Description

The Tadpole is an IP66 exterior rated, adjustable and lockable spotlight.
Constructed from precision-machined recycled aluminium, the spotlight features an anodised and powder-coated finish for enhanced durability and aesthetics.
Provided with interchangeable optics from Very Narrow to Wide Flood to elliptical beams. Additional mounting options for spike and surface mount applications.

Key Features

• Sustainable construction: made from recycled aluminium with a weather resistant long-lasting anodised and powder-coated finish. Specialist finishes available on request.
• Fixed optics can be easily swapped from Very Narrow to Flood to elliptical beam options
• Snoot and Cowl options available.
• Wall and Spike mounted options available.
• Advanced dimming options: DALI, 0-10V, DMX and Wireless dimming, down to 0.1%.
• High-performance lighting: up to 97 CRI LEDs with interchangeable optical systems.

STOANE
LIGHTING

Tadpole

STD-000030-0001



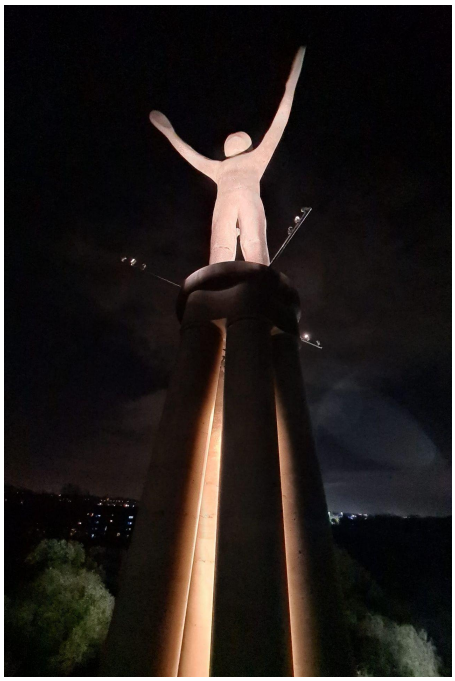

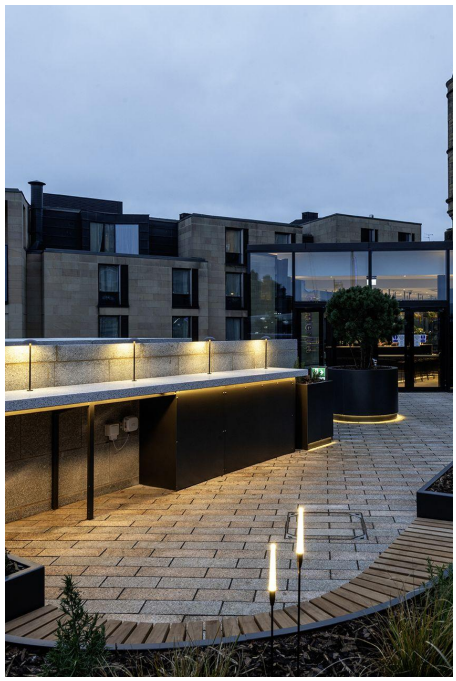

Compliance

STOANE LIGHTING

Tadpole

STD-000030-0001

Technical

Supply	Remote constant current LED driver required
Light source	SL Star
Initial output	2W 2.9Vf at 700mA **80CRI** 2200K • 150lm • 71lm/W **90CRI** 2400K • 210lm • 105lm/W **95CRI** 2700K • 167lm • 82lm/W 3000K • 177lm • 87lm/W 3500K • 187lm • 92lm/W 4000K • 197lm • 97lm/W
Light distribution	Very Narrow 8.9° Narrow 11.5° Medium 16.4° Flood 37.7° Wide Flood 60.6° Elliptical 16.1° x 47.3°
Lumen maintenance	L70 B50 >66,000 hours
Colour consistency	2 SDCM
Colour maintenance	± 0.007 Δu'v'
IP rating	IP66
Weight	0.116kg

STOANE
LIGHTING

Tadpole

STD-000030-0001

Service Commitment



