STOANE LIGHTING

EQUIPMENT DESIGN + MANUFACTURE

Fitting name:
SL_CLP_9mm COB_SL98_3000K_1288lm_ narrow_18.6°

Date:
20/11/2023

Delivered Output: 1082 Lumen

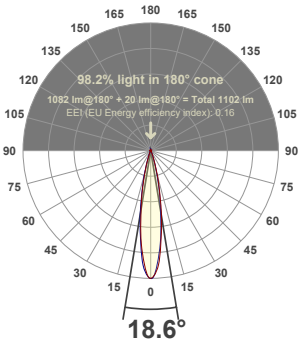

LOR: 84% *

Beam details

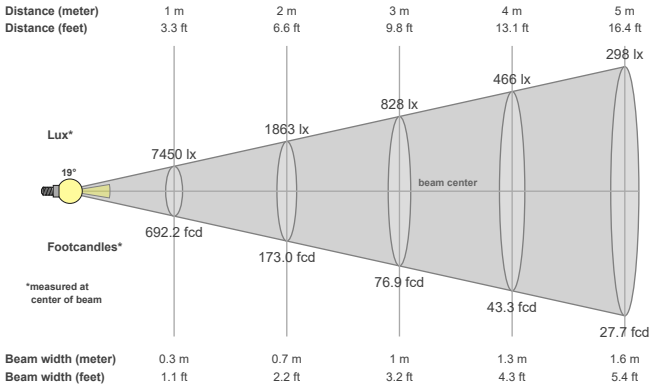

Beam angles

Beam angle 50%	Field angle 10%	Cutoff angle 2,5%
18.6°	36°	47°

Beam intensities

Peak intensity	Int. ratio in 120° cone	Int. ratio in 90° cone
7696 cd	98.4%	95.6%

Beam intensities from 1-20m

1m	2m	3m	4m	5m	6m	7m	8m	9m	10m	11m	12m	13m	14m	15m	16m	17m	18m	19m	20m
3.3ft	6.6ft	9.8ft	13.1ft	16.4ft	19.7ft	23ft	26.2ft	29.5ft	32.8ft	36.1ft	39.4ft	42.7ft	45.9ft	49.2ft	52.5ft	55.8ft	59.1ft	62.3ft	65.6ft
7450lx	1863lx	828lx	466lx	298lx	207lx	152lx	116lx	92lx	75lx	62lx	52lx	44lx	38lx	33lx	29lx	26lx	23lx	21lx	19lx
692.2fcd	173fcd	76.9fcd	43.3fcd	27.7fcd	19.2fcd	14.1fcd	10.8fcd	8.5fcd	6.9fcd	5.7fcd	4.8fcd	4.1fcd	3.5fcd	3.1fcd	2.7fcd	2.4fcd	2.1fcd	1.9fcd	1.7fcd

Files are generated using the highest CRI and highest output 3000K light source available in the luminaire, other lower outputs and colour temperatures are of course available. Other outputs and colour temperatures are available on request, these may take some time as they must be tested.

* These files are absolute measurements, not relative, as such the LOR is not generated when testing a fitting. To get an idea of LOR we use the measured delivered output in the files and documentation and calculate a ratio using the light source output mentioned in the file and product names. Note that the source output files will be nominal figures provided to us by the light source manufacturers and assuming a max 35°C ambient temperature so this LOR is as stated an indication only.

The power figures in the files have been generated based on the voltage and current to the light source only, not allowing for any driver losses. This is because our fittings are used with a number of different drivers (sometimes integral) and loaded differently, these variations effect the driver power factor and efficiency which in turn skews the power consumption figure.

Files are not always available for the specific combination of beam, accessory, driver selected, so these can be specifically requested. As with requests for specific colour temperatures this can take some time to generate as these combinations must be made then scheduled in to testing. Stoane Lighting will advise on how long requests for specific data are likely to take.

Stoane Lighting advise that lighting designers apply a +/- 5% tolerance allowance on the files we provide as subtle variations in system components (eg slight variations in output of LED light sources through a bin) and ambient temperature variations can effect output and distribution slightly.